DAYCO AFTERMARKET
TECHNICAL INFORMATION

Subject:

N° : TI0093EN

KTB292
FIAT – LANCIA
CINQUECENTO – PANDA –
SEICENTO – UNO – Y
Mtr. 156A2.000 /100 /246 –
156A4.000 /048 – 156C.046 –
160A3.000 – 176B2.000

The KTB292 timing kit includes :

- a **timing belt 94861** with 125 teeth, 15 mm wide (OES 55203786)
- a **tensioner ATB2240** (OES 71740977)

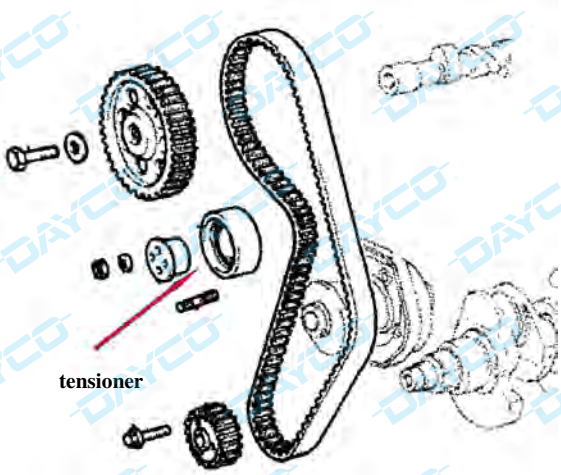

tensioner

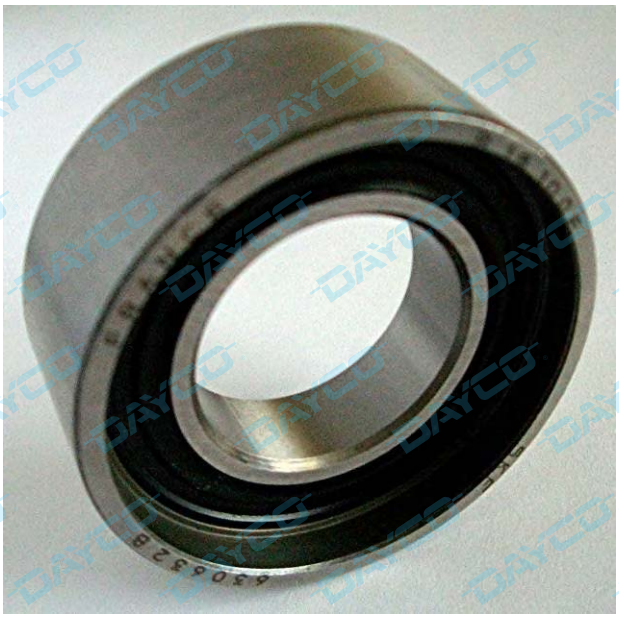

tensioner

"PLEASE FOLLOW THE INSTRUCTIONS OF THE VEHICLE MANUFACTURER"
Dayco Europe S.r.l. a Socio Unico is the exclusive owner of this document. Any right of publishing, using and reproducing this document is exclusively reserved to Dayco Europe S.r.l. a Socio Unico.

TENSIONER ASSEMBLING PROCEDURE

- Make sure the timing notches are aligned in A and B.
- Position the new tensioner with the nut slackened.
- Install the timing belt with the direction arrows, if any, directed in the rotation direction.
- Use the special tensioning tool no. 1860745100/300 and insert it in the two holes of the tensioner.
- Apply the weight at 80 mm on the graduated bar for the Seicento; at 65 mm for all the other models.
- Make sure the tool arm is in the horizontal position.
- Rotate the crank shaft by two turns clockwise.
- Tighten the tensioner nut to a torque of 28 Nm.
- Remove the tensioning tool.
- Make sure the timing notches are still aligned in the A and B position; if not, repeat the procedure.
- Reassemble the other components in the reverse order of disassembly.
- Tighten the bolts of the crank shaft pulley to a torque of 25 Nm.

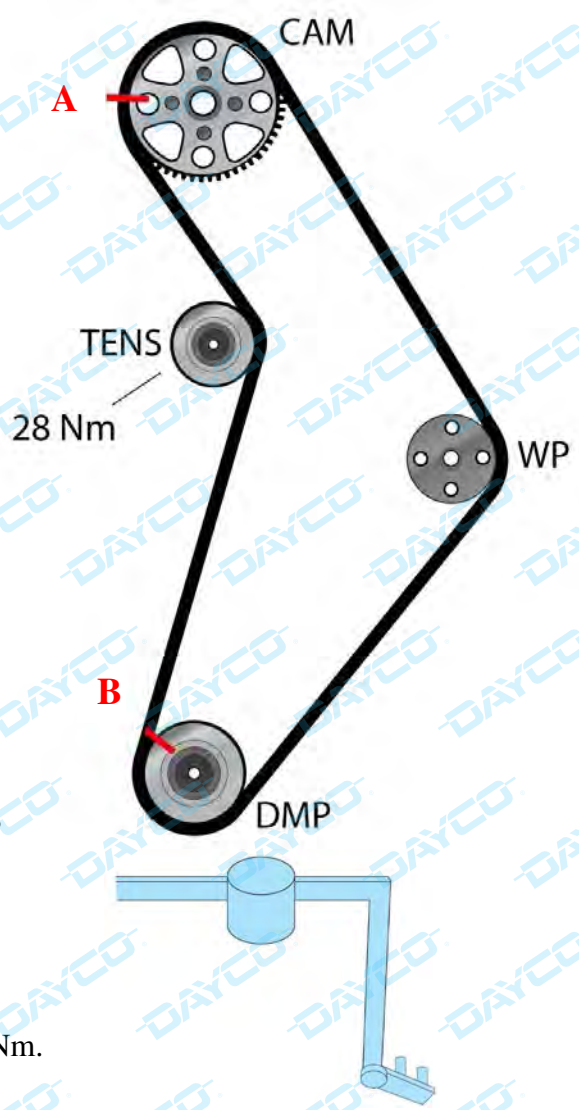

tool 1860745100/300

Description	OES n°	Dayco n°	Dayco Kit
Timing belt	55203786	94861	KTB292
Tensioner	71740977	ATB2240	
Kit	71746353	KTB292	

Dayco Europe S.r.l. a Socio Unico is the exclusive owner of this document. Any right of publishing, using and reproducing this document is exclusively reserved to Dayco Europe S.r.l. a Socio Unico.

MOVE FORWARD. ALWAYS.™

DAYCO ENVIRONMENTAL PACKAGING LABELLING

Legislative Decree no. 116 of 3 September 2020 states that all packaging shall be *"appropriately labelled in accordance with the procedures laid down in the applicable UNI technical standards and in compliance with the decisions of the European Commission, in order to facilitate the collection, reuse, recovery and recycling of packaging, and to provide consumers with proper information on the final destination of packaging. For the purposes of identifying and classifying packaging, producers are also required to indicate the nature of the packaging materials used, on the basis of Commission Decision 97/129/EC."*

In compliance with the law this document contains:

- Identification of the packaging composition material for Aftermarket products
- Consumer instructions for separate waste collection
- The images used are to be considered as examples of the possible articles sent

Separate waste collection: Check your local municipal guidelines.

Picture	Packaging Type	Material	Identification under Decision 97/129/EC	Waste Collection	Separate Waste Collection
	Cardboard box	Non-corrugated cardboard	21 PAP	Separate waste collection	Paper collection
	Paper band	Non-corrugated cardboard	21 PAP	Separate waste collection	Paper collection
	Cardboard box	Corrugated cardboard	20 PAP	Separate waste collection	Paper collection
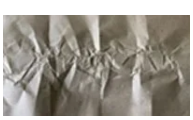	Divider Material	Paper	22 PAP	Separate waste collection	Paper collection

DAYCO®
MOVE FORWARD. ALWAYS.™

Picture	Packaging Type	Material	Identification under Decision 97/129/EC	Waste Collection	Separate Waste Collection
	Divider Material	Corrugated cardboard	20 PAP	Separate waste collection	Paper collection
	Divider Material	Corrugated cardboard	20 PAP	Separate waste collection	Paper collection
	Divider Material Airplus	High density polyethylene	02 PE-HD	Separate waste collection	Plastic collection
	Plastic bag	Low density polyethylene	04 PE-LD	Separate waste collection	Plastic collection
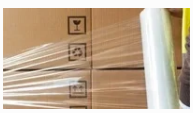	Film	Low density polyethylene	04 PE-LD	Separate waste collection	Plastic collection
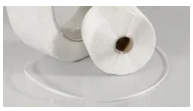	Strap	Polypropylene	05 PP	Separate waste collection	Plastic collection
	Scotch tape	Polypropylene and adhesive	05 PP	Mixed waste collection	Mixed waste collection
	Pallet	Wood	50 FOR	Separate waste collection	Wood collection